PRODUCT DATA SHEET

F4B-SC-115

124213

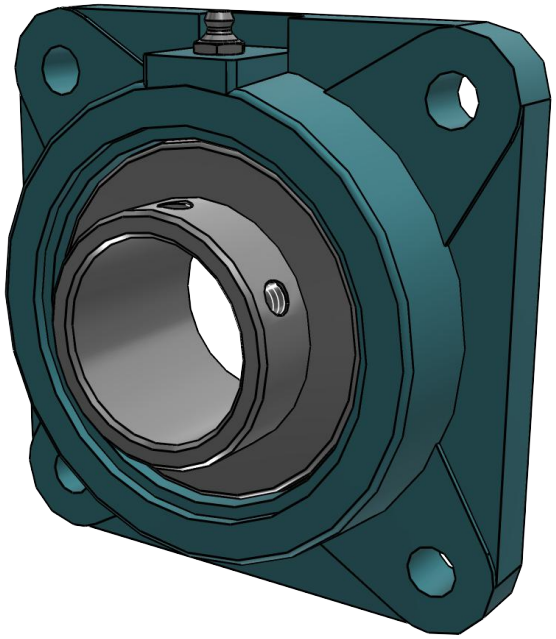

Interactive 3d graphic, click to activate and rotate

Copyright © All product information within this document is subject to Dodge Industrial, Inc. copyright © protection, unless otherwise noted.

2D derivation

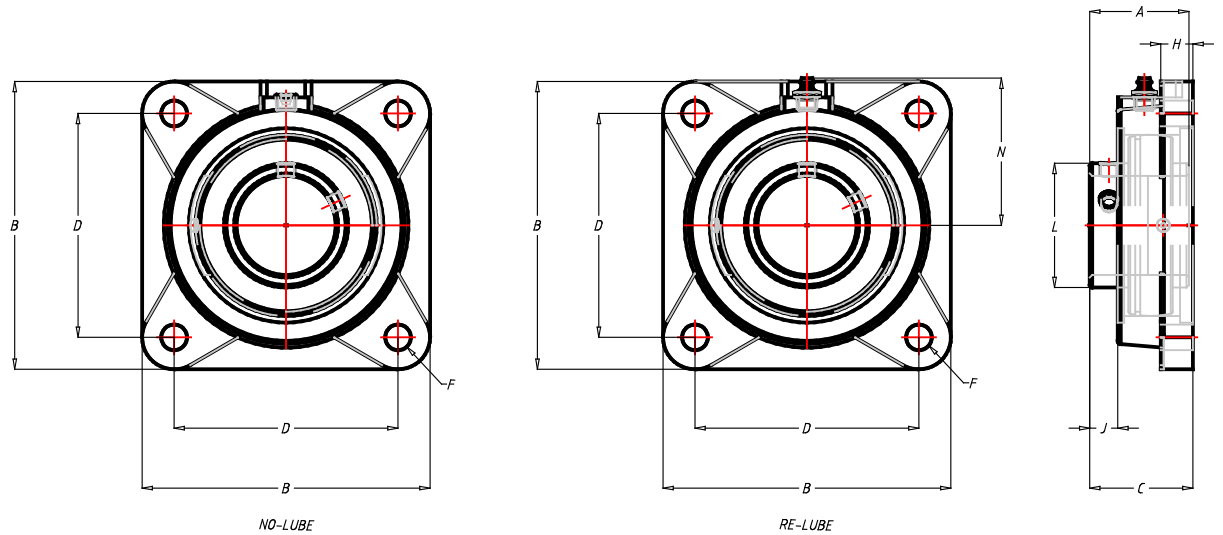

Attribute	Value
Series	210
Shaft Size [INCH]	1-15/16
Part No.	124213
Description	F4B-SC-115
Weight [lbs]	6.7
Lubrication Feature	RE-LUBE
A [INCH]	1.94
B [INCH]	5.63
C [INCH]	2.02
D [INCH]	4.38
Bolt Diameter [INCH]	1/2
H [INCH]	0.63
J [INCH]	0.55
L [INCH]	2.43
N [INCH]	2.88