PRODUCT DATA SHEET

F4B-SC-100

124103

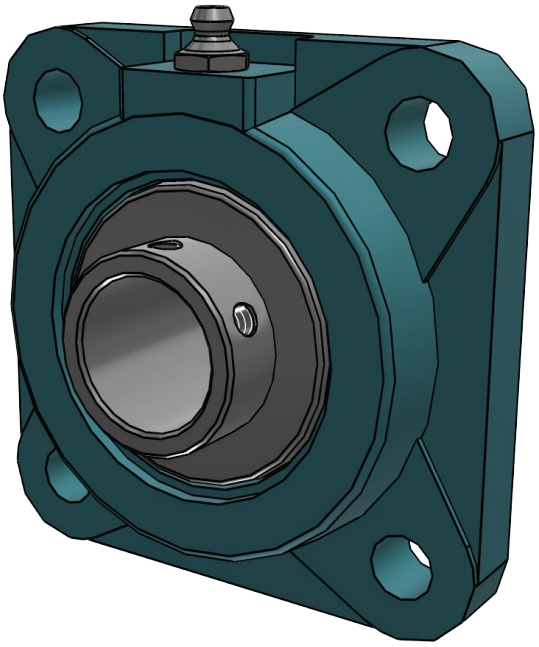

Interactive 3d graphic, click to activate and rotate

Copyright © All product information within this document is subject to Dodge Industrial, Inc. copyright © protection, unless otherwise noted.

2D derivation

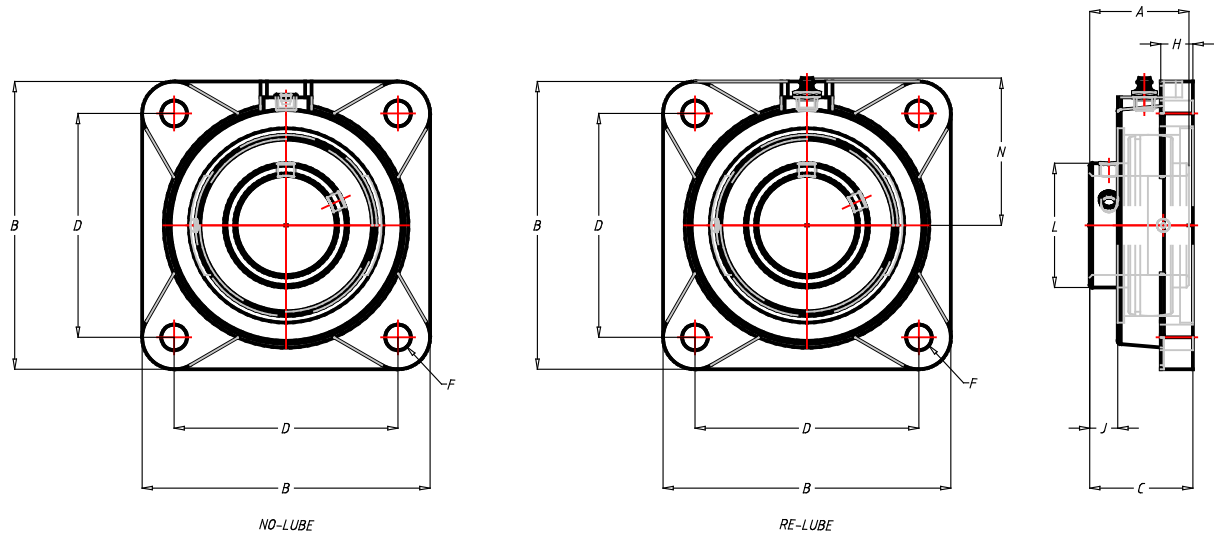

Attribute	Value
Series	205
Shaft Size [INCH]	1
Part No.	124103
Description	F4B-SC-100
Weight [lbs]	1.8
Lubrication Feature	RE-LUBE
A [INCH]	1.34
B [INCH]	3.75
C [INCH]	1.37
D [INCH]	2.75
Bolt Diameter [INCH]	7/16
H [INCH]	0.50
J [INCH]	0.42
L [INCH]	1.32
N [INCH]	2.06